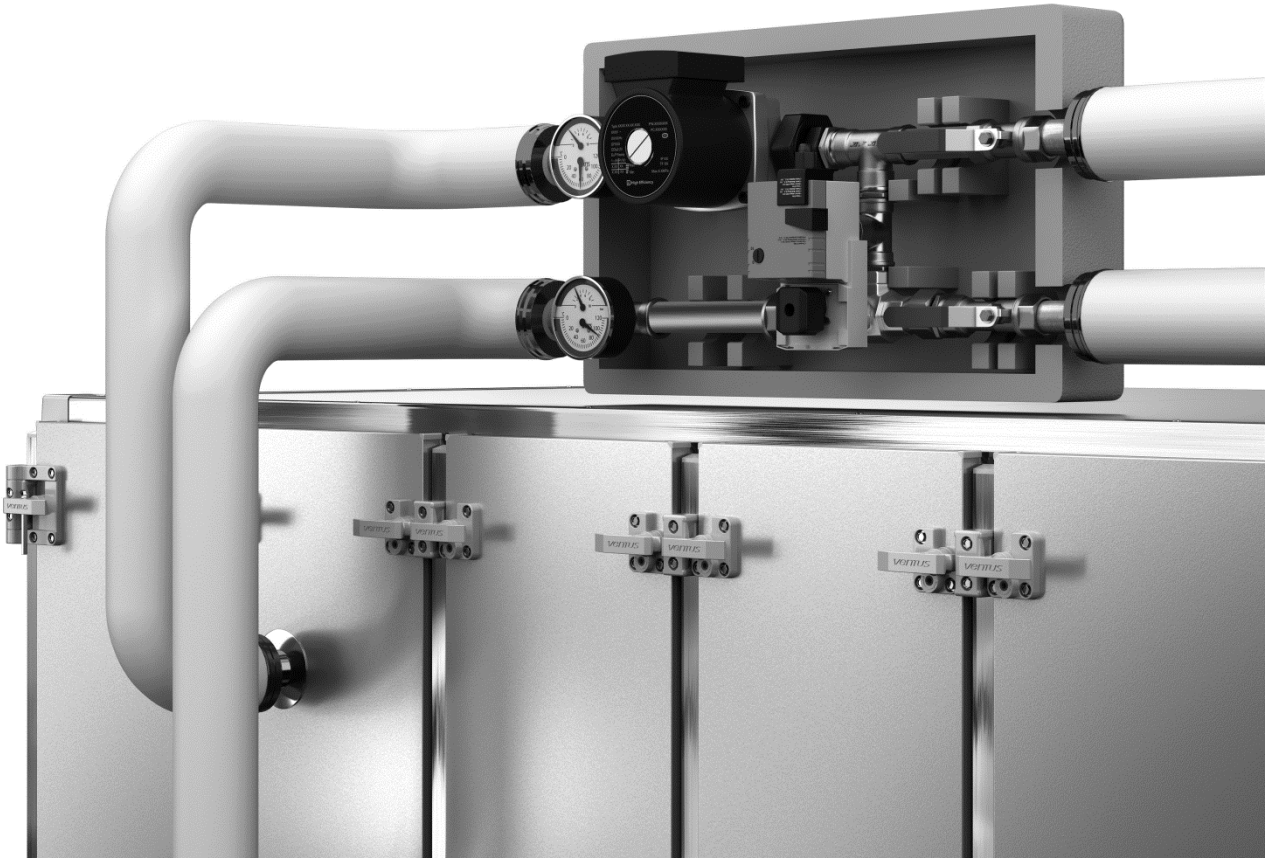

Water pump group

Technical documentation

WPG-OEM-v.1.4 (07.2025)

CONTENTS

1. INTRODUCTION 2
1.1. Precautions, requirements, recommendations 2
1.2. Transport and storage 2
2. APPLICATION AND DESIGN 2
2.1. Technical parameters 4
2.2. Pump groups characteristic 5
3. INSTALLATION 6
3.1.Hydraulic installation 6
3.2.Electric installation 7
4. OPERATION AND MAINTANANCE 9

1. INTRODUCTION

1.1. Precautions, requirements, recommendations

Detailed analysis of this documentation, as well as assembly and use of equipment, according to the descriptions contained therein, and following all safety requirements, is the basis for the correct and safe operation of the device.
Producer won´t be responsible for damages caused by wrong usage or unrespect of the instructions given in this manual.
This technical documentation must be delivered together with the device. The documentation contains information concerning all possible configurations of water pump group, examples of installation, as well as activation, use, repair and maintenance. This instruction manual is an essential component of the product and should be placed near the device and be readily available to the service team.
Manufacturer reserves the right to introduce changes to the instruction, as well as changes to the device that affect its operation, without prior notice. VTS shall be are no responsibility for on-going maintenance and damage, caused by standstills of equipment related to the waiting for warranty services, all and any damage related to the Client's property, other than the device in question, as well as malfunctions that result from incorrect installation or improper use of the device.

1.2. Transport and storage

Prior to the installing and taking the device out of the cardboard box, it is required to check whether the cardboard box has not been damaged in any way.

2. APPLICATION AND DESIGN

The water pump group (WPG) it is the set of connected elements designed for control of the water heater capacity.
VTS offer two types of the pump groups: first one (WPG) is the fully assembled, ready to connect to the water coil, set of the pump, mixing valve and by-pass with shutting boll valves (Fig.1a) and the second (WPG.S) it's the more simple and cheaper configuration of the mixing valve and circulation pump (Fig.1b). The second one needs more actions and use additional hydraulic fittings to inbuilt in the water heater supply installation.
Both are divided on 9 sizes. That are combination of 5 tree-way mixing valves with 3 sizes of water pump.
The main elements of the pump circuits that are: circulating water pump, three-way valve with actuator, filter, and two manometers.
The water pump group is designed for indoor installation. For outdoor installation, additional casing construction should be provided to protect against weather conditions.

a) WPG

b) WPG.S

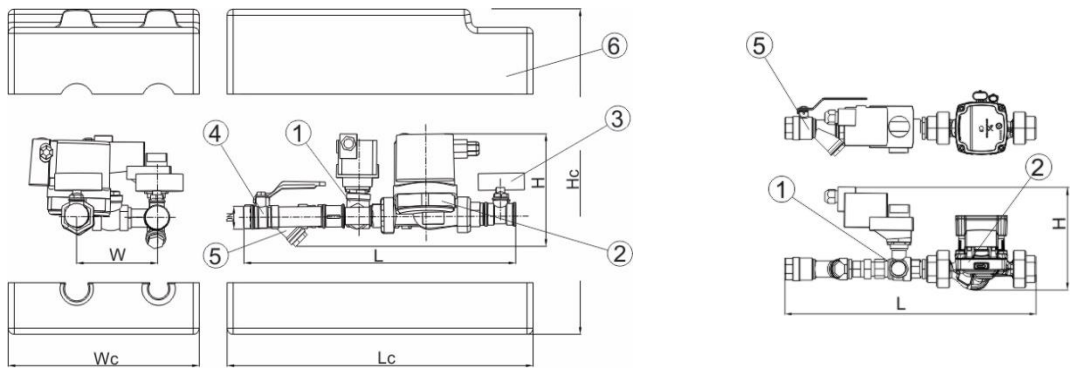

Fig.1. Structure of water pump group

1 – tree-way valve with actuator, 2- pump, 3 – thermomanometer, 4- ball valve, 5 – ball valve with filter, 6 – casing

Fig.2. showing the simple example of application with the Air Handling unit and control elements.

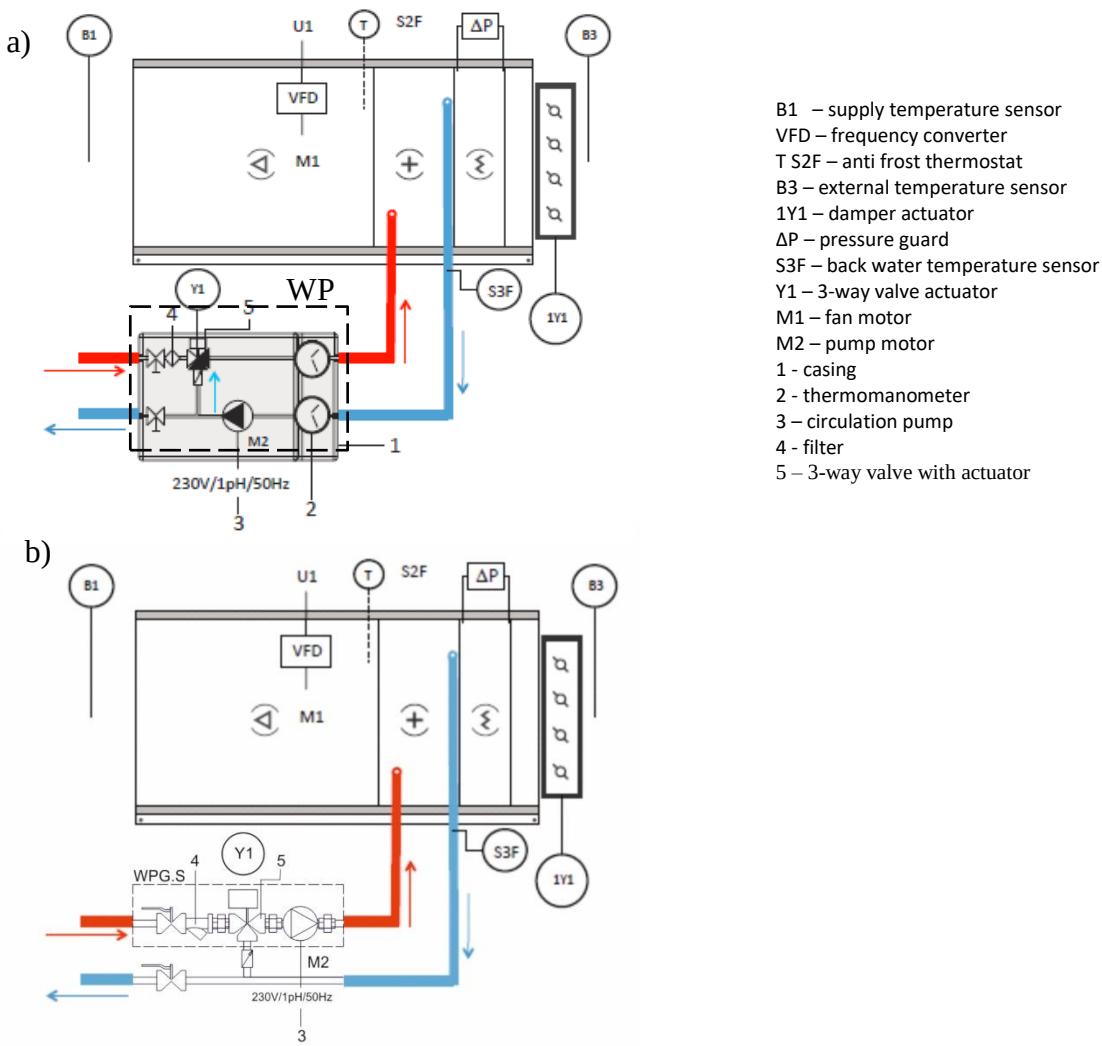

B1 – supply temperature sensor
VFD – frequency converter
T S2F – anti frost thermostat
B3 – external temperature sensor
1Y1 – damper actuator
ΔP – pressure guard
S3F – back water temperature sensor
Y1 – 3-way valve actuator
M1 – fan motor
M2 – pump motor
1 - casing
2 - thermomanometer
3 – circulation pump
4 - filter
5 – 3-way valve with actuator

Fig.2. Operation diagram with full WPG (a), and simple WPG.S (b)

2.1. Technical parameters

Table.1. Dimension and connection diameter

Pump circuit type	Foam casing type	Circuit casing dimension [mm]			Connection diameter *		Circuit set dimension [mm]		
		Lc	Wc	Hc	[inch]	DN	L	W	H
WPG - 25-06 - 2.5 E	S	540	305	230	3/4"	20	436	135	165
WPG - 25-06 - 4.0 E					1"	25	448	135	176
WPG - 25-06 - 6.3 E					1"	25	448	135	176
WPG - 25-08 - 4.0 E	L	690	355	270	1"	25	498	135	182
WPG - 25-08 - 6.3 E					1"	25	498	135	182
WPG - 25-06 – 10 E					1 1/4"	32	516	191	195
WPG - 25-08 – 10 E					1 1/4"	32	566	191	200
WPG - 25-08 – 16 E					1 1/4"	32	566	191	220
WPG - 25-12 – 16 E					1 1/4"	32	566	191	220
WPG.S - 25-06 - 2,5 E	-	-	-	-	3/4"	20	410	-	165
WPG.S - 25-06 – 4 E					1"	25	418	-	176
WPG.S - 25-06 - 6,3 E					1"	25	418	-	176
WPG.S - 25-08 – 4 E					1"	25	468	-	182
WPG.S - 25-08 - 6,3 E					1"	25	468	-	182
WPG.S - 25-06 – 10 E	-	-	-	-	1 1/4"	32	460	-	195
WPG.S - 25-08 – 10 E					1 1/4"	32	530	-	200
WPG.S - 25-08 – 16 E					1 1/4"	32	530	-	220
WPG.S - 25-12 – 16 E					1 1/4"	32	530	-	220

* female thread diameter

Table.2.Technical data

		Pump								3 way valve		Actuator	
Type	mass [kg]	Voltage	P max. [W]	Max. current [A]	Max. water temp. [C]	Ambient temp. [C]	Max work. Pressure [bar]	Overload protection	IP	k_{vs}	Max. water temp [C]	IP	Voltage
WPG - 25-06 - 2.5 E	5,4	1 x 230V/50Hz	37	0,29	110	0..40	10	integrated	44	2,5	120	54	24VAC
WPG.S - 25-06 - 2,5 E	4,2												
WPG - 25-06 - 4.0 E	6,2									4			
WPG.S - 25-06 - 4.0 E	5,1												
WPG - 25-06 - 6.3 E	6,4									6,3			
WPG.S - 25-06 - 6,3 E	5,3												
WPG - 25-06 - 10 E	8,9									10			
WPG.S - 25-06 - 10 E	6,8												
WPG - 25-08 - 4.0 E	6,6		80	0,71						4			
WPG.S - 25-08 - 4 E	5,7												
WPG - 25-08 - 6.3 E	6,8									6,3			
WPG.S - 25-08 - 6,3 E	5,9												
WPG - 25-08 - 10 E	10,9									10			
WPG.S - 25-08 - 10 E	9,1												
WPG - 25-08 - 16 E	11,8									16			
WPG.S - 25-08 - 16 E	9,5												
WPG - 25-12 - 16 E	13,7		180	1,53						16			
WPG.S - 25-12 - 16 E	11,2												

*Additional information for the elements of the group can find in the suppliers manuals.

2.2. Pump groups characteristic

The below characteristic concerning to the clean water. The pumps groups may be used in heating systems containing glycol based anti-freeze with corrosion inhibitors, up to a maximum of 50% solution. Depending on the type of glycol, the mixture and the liquid temperature, the viscosity will increase with water as medium. This will influence the pressure loss of the system as well as the efficiency, performance and load of the pump.

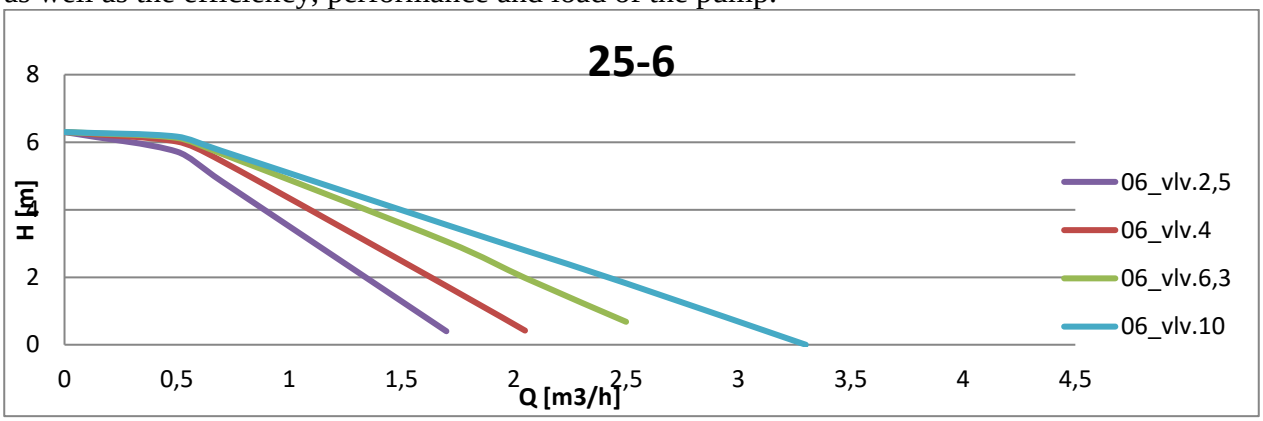

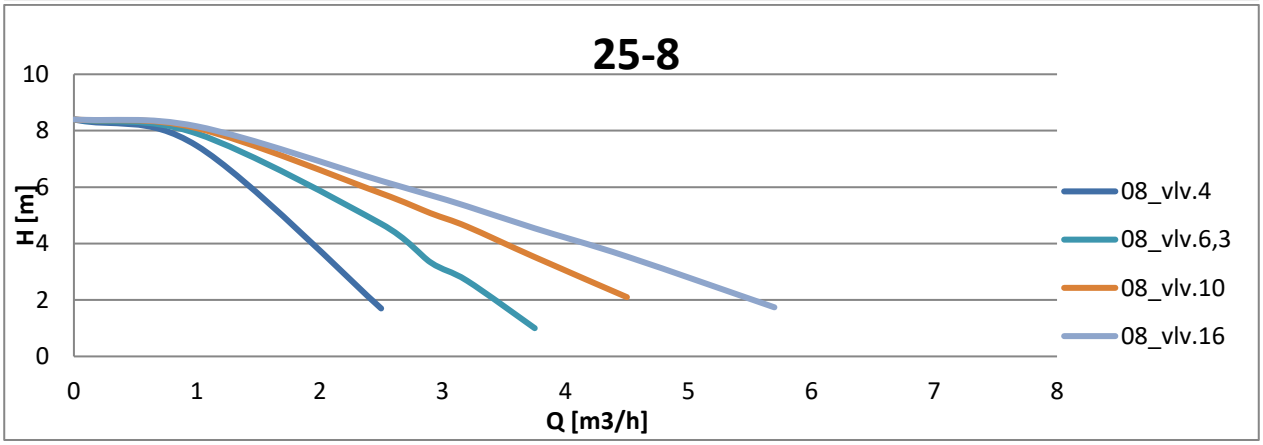

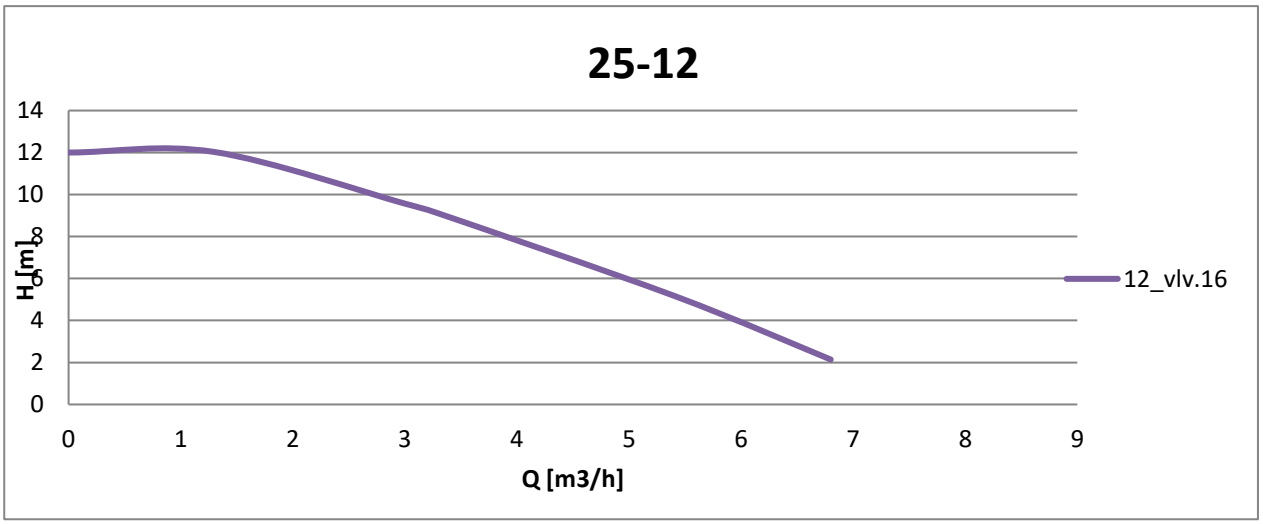

Fig.3. Characteristics of water pump groups

3. INSTALLATION

3.1.Hydraulic installation

The water pump group must always be installed where the pump motor shaft is in the horizontal position. Before installing the system should be flushed out thoroughly to clear all foreign matter such as solder, steel wool, copper filings.
The pump group must be connected to the installation with thermomanomeher from the water heater side and valves from the net side, like in the below example.
Connection to the exchanger and installation should be carried out so as not to allow for stresses which may result in mechanical damages or leakage. The pipeline should be supported in some place to avoid the pass of weight and thermal stresses onto the exchanger's connections.
Ends of the groups are ended with an internal thread. To provide the seal, connection should be made with using teflon tape or other sealing material. During assembly of the system to the pump groups, counter the connection with additional wrench.

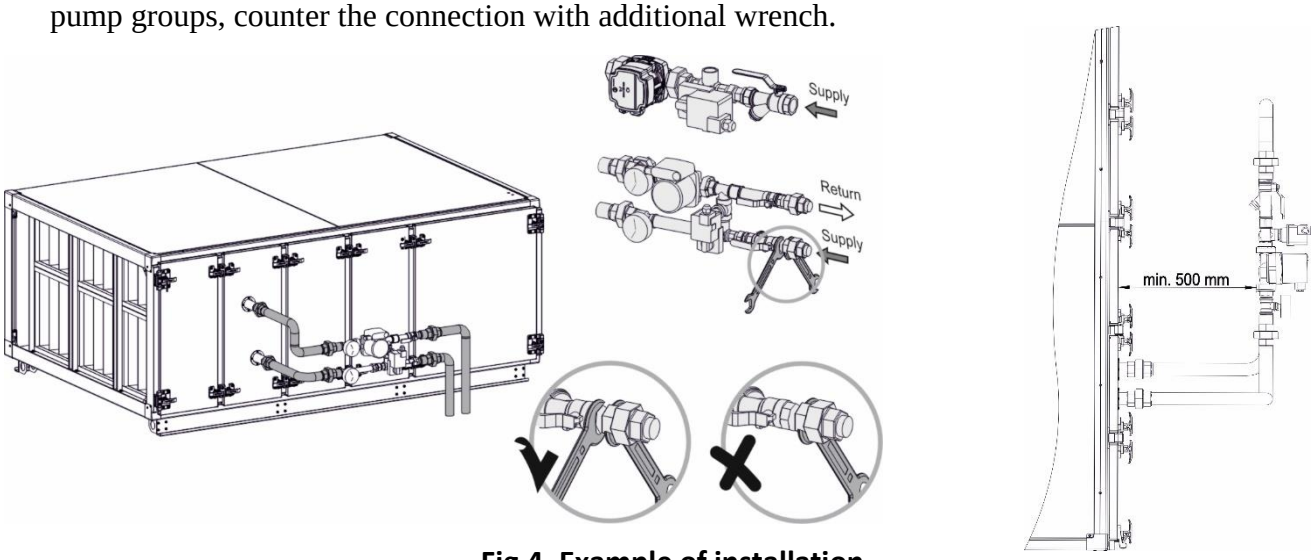

Fig.4. Example of installation

The pipe lines and place of water pump group should be planned so as it does not collide with the other AHU sections and make possible inspection them without necessity disassembly. Applied method of pump group installation with the supply system should allow for an easy pipeline disassemble in order to remove the exchanger from the AHU.

Below drawing shows the available positions.

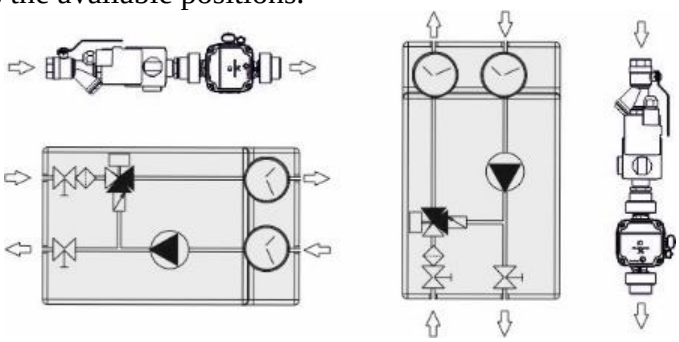

Fig.5. Position of the water pump group.

Group cannot be subjected to very high temperatures, such as occur during eg. welding or soldering. It should be installed only after the finished such work.
After assembly of the group, pressure test must be performed in order to check the tightness in the threaded connections.

After connection water pump group to the installation make electrical connection of the pump and valve actuators and assembly the casing.

3.2.Electric installation

The electrical connection should be carried out by an authorized electrician in accordance with local regulations.

Do not remove motor terminal box covers, electrical cables or any other electrical protective covering without first ensuring that the electrical supply is suitably isolated. Do not attempt to supply electricity to the pump without ensuring that all electrical fittings, cables and enclosures are intact and suitably electrically isolated from human touch during operation.

Electric connection for the pump

The pump requires no external motor protection. Check that the supply voltage and frequency correspond to the values stated on the nameplate.

The pump must not be used with an external speed control which varies the supply voltage, for example phase-cut or pulse-cascade control.
The supplied pumps are delivered with molex 3-pin plug and cable to moved out of the pump group casing. Connect power supply to the three leads L, N and PE.

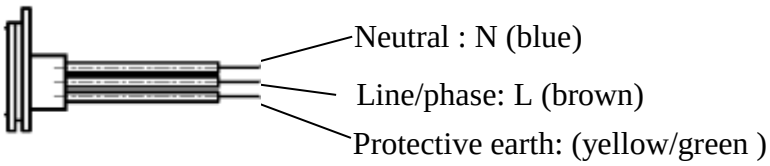

The cable size to be used is 3 core 0.75mm2. The cable should be capable of withstanding a minimum temperature of 100°C.

Electric connection for the valve actuator

To make electrical connection of the valve actuator use cable 3x 075mm2 according to below scheme

Wiring diagram Standard connection

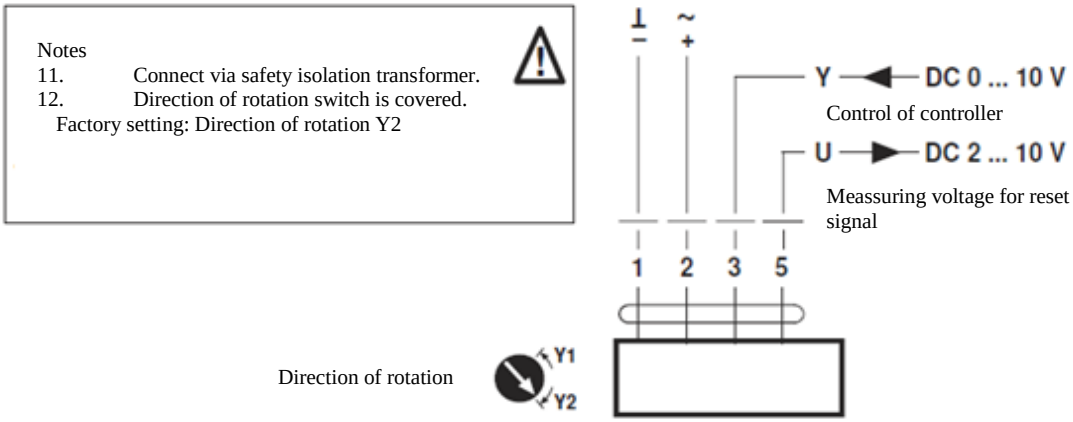

In the any other option refer to the manual delivered with valve actuator.

Both of them can be connected to VTS control system in case of ordering VTS AHU with full automation.

4. OPERATION AND MAINTENANCE

Start-up of the pump

Do not start the pump until the system has been filled with liquid and vented. Being self-venting, the rotor can does not require venting before start-up. Air inside the pump will be transported by the medium into the system during the first minutes after pump start-up.
The system cannot be vented through the pump. As the pump is self-venting, it does not need to be vented before start-up. however, it is recommended to vent pumps installed in systems where the pumped medium is very dirty, as well as after service of the pump. The screw may be loosened to check if the system has been vented completely.

When loosening the air-venting/de-blocking screw, be aware of hot, spraying water.

4.1. Operating the pumps 25-6 and 25-8

Operation panel

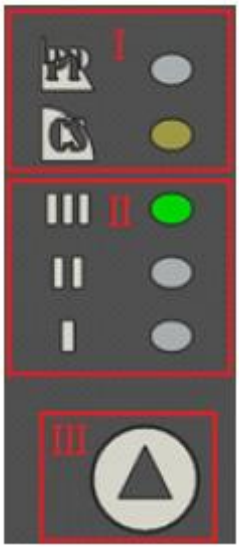

I Mode display area in the pump

II Button to select pump settings in the pump

III Gear display area in the pump

After power on, displayer in location 1 and location 2 works.
Failure that disables normal running of the pump (such as stagnation) will be displayed as “three green lights on”.
If failure displays, it has to cut off the power supply to troubleshoot. After troubleshooting, power on and start the pump.

Lighting area that shows pump settings
Circulating pump has seven settings, which can be achieved through buttons.

Pressing times	Lighting area	Description	Displayer icon
0	CS III (Factory setting)	Constant speed curve, speed III	
1	PP I	Proportional pressure curve, speed I	
2	PP II	Proportional pressure curve, speed II	
3	PP III	Proportional pressure curve, speed III	
4	CS I	Constant speed curve, speed I	
5	CS II	Constant speed curve, speed II	
6	CS III	Constant speed curve, speed III	
7	PWM	Automatic swich to this mode when accsessing PWM signal	

4.2.Operating the pump 25-12

Operating panel

1 Display that shows the actual consumption power in watt.
2 Indicate lighting areas in automatic night mode.
3 Button to start the automatic night mode.
4 Button to select pump settings.
5 Automatically run and display light area.
6 Indicate seven lighting areas set in the pump.

Display is ready to work after power on.
Faliure that dsiables normal running of the pump (such as stagnation) will be displayed as E(X) (X is 1 or 2). If failure displays, it has to cut off the power supply to troubleshoot. After troubleshooting, power on and start the pump.

Lighting area that shows pump settings
Circulating pump has ten settings, which can be achieved through buttons. Pump setting is indicate by ten different lighting areas.

Pressing times	Lighting area	Description	Displayer icon
0	A (Factory setting)	Autoadaptatnion	A
1	PP1	Min. proportional pressure curve	PP +
2	PP2	Medium proportional pressure curve	PP +
3	PP3	Max. proportional pressure curve	PP +
4	CP1	Min. Constant pressure curve	CP +
5	CP2	Medium Constant pressure curve	CP +
6	CP3	Max. Constant pressure curve	CP +
7	I	Constant speed curve, speed I	S +
8	II	Constant speed curve, speed II	S +
9	III	Constant speed curve, speed III	S +
10	A	Autoadaptation	A

4.3. Trouble shooting

Ensure that the power supply is cut off and will not be accidentally swiched on before preparing any maintenance and repair of the pump

Control panel	Causes	Troubleshooting method
Indicator lights off	a) fuse burned	replace the fuse
	b) braker is off	put the braker on
	c) pump is broken	replace the pump
	d) overvoltage or undervoltage	check whether the power supply is within the specified range
E1	pump is blocked	remove impurities
E2	lacking phase	replace the pump
E3	Overvoltage or undervoltage	replace the pump
E4	short circuit	replace the Pump

Note: When the pump is running, the display panel will go out after 10s no operating, and then press any button to display again.

It is forbidden to place, dispose of and store worn-out electric and electronic equipment, together with other waste. Dangerous compound contained in electronic and electric equipment have a very adverse impact on plants, micro-organisms, and, most importantly, on humans, as they damage our central and peripheral nervous system, as well as circulatory and internal system. Additionally, they cause serious allergic reactions. Worn-out equipment is to be delivered to a local collection point for used electric equipment, which carries out a selective collection of waste.

REMEMBER!

The user of equipment intended for households, and which has been worn out, is obliged to transfer such equipment to a collecting unit that collects worn-out electric and electronic equipment. The selective collecting and further processing of waste from households contributes to the protection of environment, reduces the penetration of hazardous substances into the atmosphere and surface waters.